6. Hardware Detail

6.1. Microcomputer

6.1.1. The uPD75304GF/uPD75308/uPD75P308GF/uPD75P316AGF Microcomputer was chosen for the following reasons:

- Cheaper
- Low operating current
- Having an on-chip programmable LCD controller/driver
- Six interrupt sources and efficient interrupt processing
- Three versatile timers
- Less chip count
- Pin compatibility of similar package with difference ROM sizes
- Good support

6.1.2. Pin Assignment

Pin	I/O	Assignment	Device	Remark
P00/INT4	I	Battery T1	Battery	Detects battery Voltage Level 1
P01/SCK	O	SCK	93C46P	EEPROM
P02/SO	O	S0	93C46P	EEPROM
P03/SI	I	SI	93C46P	EEPROM
P10/INT0				
P11/INT1	I	A/D INT	UPC4062	A/D Conversion Interrupt
P12/INT2				
P13/TI0				
P20/PTO0				
P21	I	Batt T2	Battery	Detects battery Voltage Level 2
P22/PCL				
P23/BUZ				
P30	O	CS	93C46P	EEPROM
P31	O	P-On/Off	DC Main Power	Controls Power
P32	I	SPAN SW	Switch	Span Enable/Disable
P33	O			
P40	O	A/D Control	74HC4066	A/D Conversion Control
P41	O	A/D Control	74HC4066	A/D Conversion Control
P42	O	A/D Control	74HC4066	A/D Conversion Control
P43	O	A/D Control	74HC4066	A/D Conversion Control
P50				
P51				
P52				
P53				
P60/KR0	I	Key 1	Key	Re-Zero Key
P61/KR1	I	Key 2	Key	Tare Key
P62/KR2	I	Key 3	Key	On/Off Key
P63/KR3				
P70/KR4				
P71/KR5				
P72/KR6				
P73/KR7				

Pin	I/O	Assignment	Device	Remark
S0	O	Segment 0	LD-B7873AZ	Segment Signal Output
S1	O	Segment 1	LD-B7873AZ	Segment Signal Output
S2	O	Segment 2	LD-B7873AZ	Segment Signal Output
S3	O	Segment 3	LD-B7873AZ	Segment Signal Output
S4	O	Segment 4	LD-B7873AZ	Segment Signal Output
S5	O	Segment 5	LD-B7873AZ	Segment Signal Output
S6	O	Segment 6	LD-B7873AZ	Segment Signal Output
S7	O	Segment 7	LD-B7873AZ	Segment Signal Output
S8	O	Segment 8	LD-B7873AZ	Segment Signal Output
S9	O	Segment 9	LD-B7873AZ	Segment Signal Output
S10	O	Segment 10	LD-B7873AZ	Segment Signal Output
S11	O	Segment 11	LD-B7873AZ	Segment Signal Output
S12	O	Segment 12	LD-B7873AZ	Segment Signal Output
S13	O	Segment 13	LD-B7873AZ	Segment Signal Output
S14	O	Segment 14	LD-B7873AZ	Segment Signal Output
S15	O	Segment 15	LD-B7873AZ	Segment Signal Output
S16	O	Segment 16	LD-B7873AZ	Segment Signal Output
S17				
S18				
S19				
S20				
S21				
S22				
S23				
BP0/S24				
BP1/S25				
BP2/S26				
BP3/S27				
BP4/S28				
BP5/S29				
BP6/S30				
BP7/S31				
COM0	O	Common 0	LD-B7873AZ	Common Signal Output
COM1	O	Common 1	LD-B7873AZ	Common Signal Output
COM2	O	Common 2	LD-B7873AZ	Common Signal Output
COM3	O	Common 3	LD-B7873AZ	Common Signal Output
BIAS	O	Bias	-	LCD Drive Power Supply
VLC0	-	VLC0	-	LCD Drive Power Pin
VLC1	-	VLC1	-	LCD Drive Power Pin
VLC2	-	VLC2	-	LCD Drive Power Pin
RESET	I	RESET	-	SYSTEM RESET
X1	I	-	Oscillator	4.19 MHz Crystal
X2	I	-	Oscillator	4.19 MHz Crystal
XT1	I	-	-	Connects To The VSS Pin
XT2				
VSS	-	-	-	Grounding Potential Pin
VDD	-	-	-	Positive Power Pin (5V)
NC/VPP	-	-	-	Connects To The VDD Pin

6.2. Electrical Blocks Connection Diagram

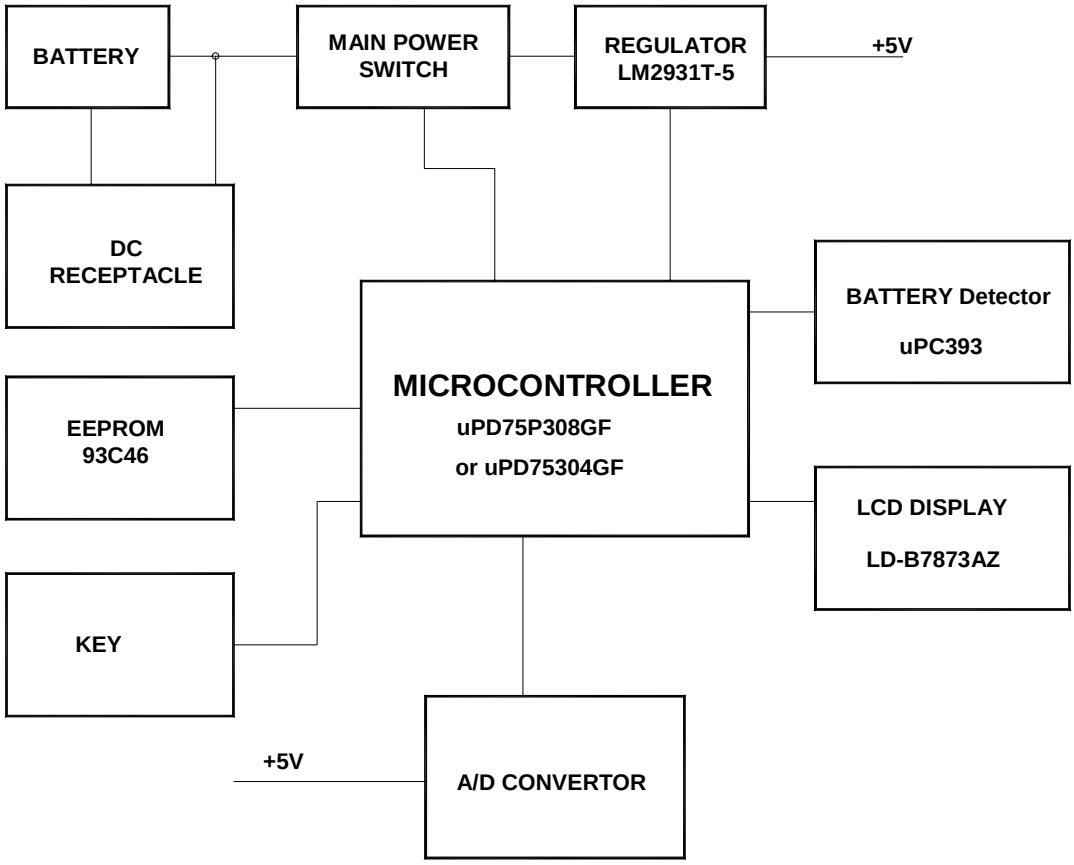

6.3. Physical Connection Diagram

6.3.1. Non-RFI type

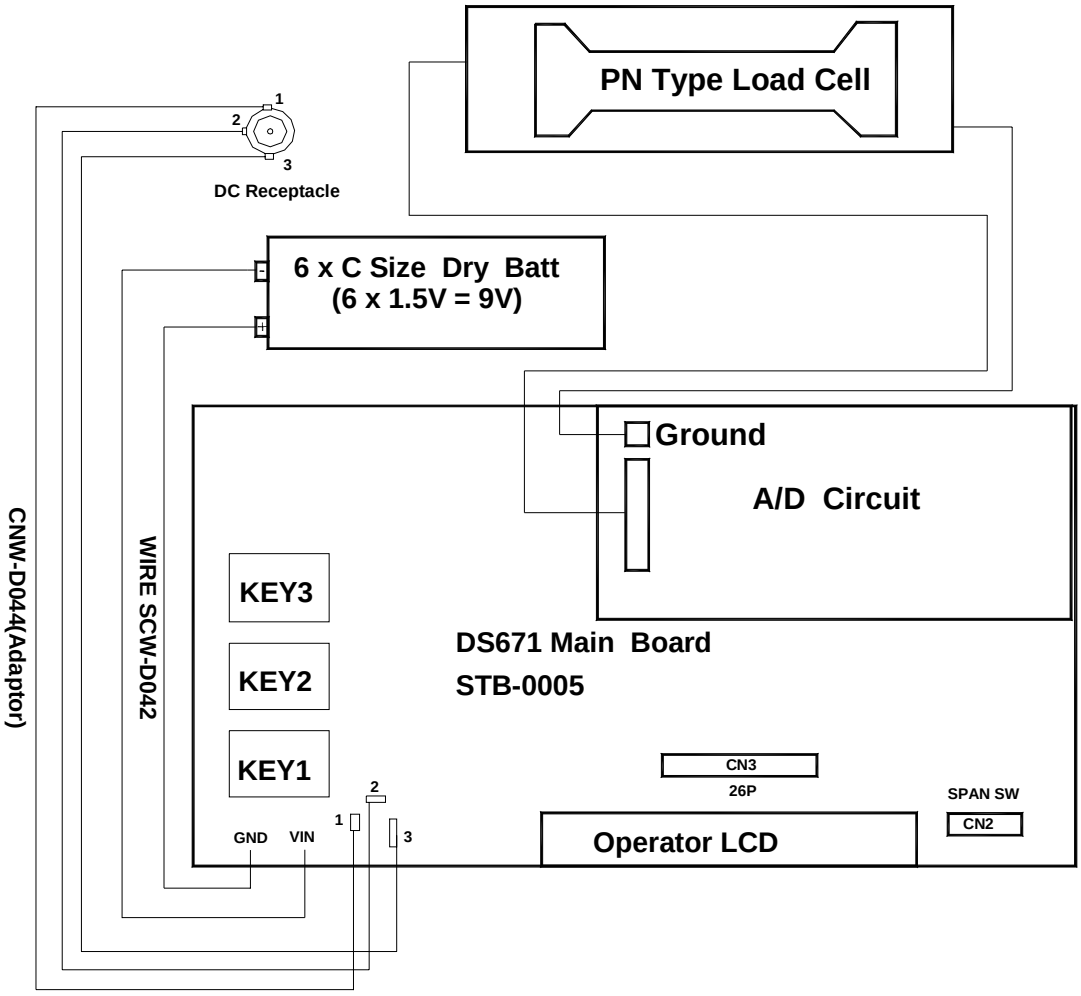

6.3.2. RFI type

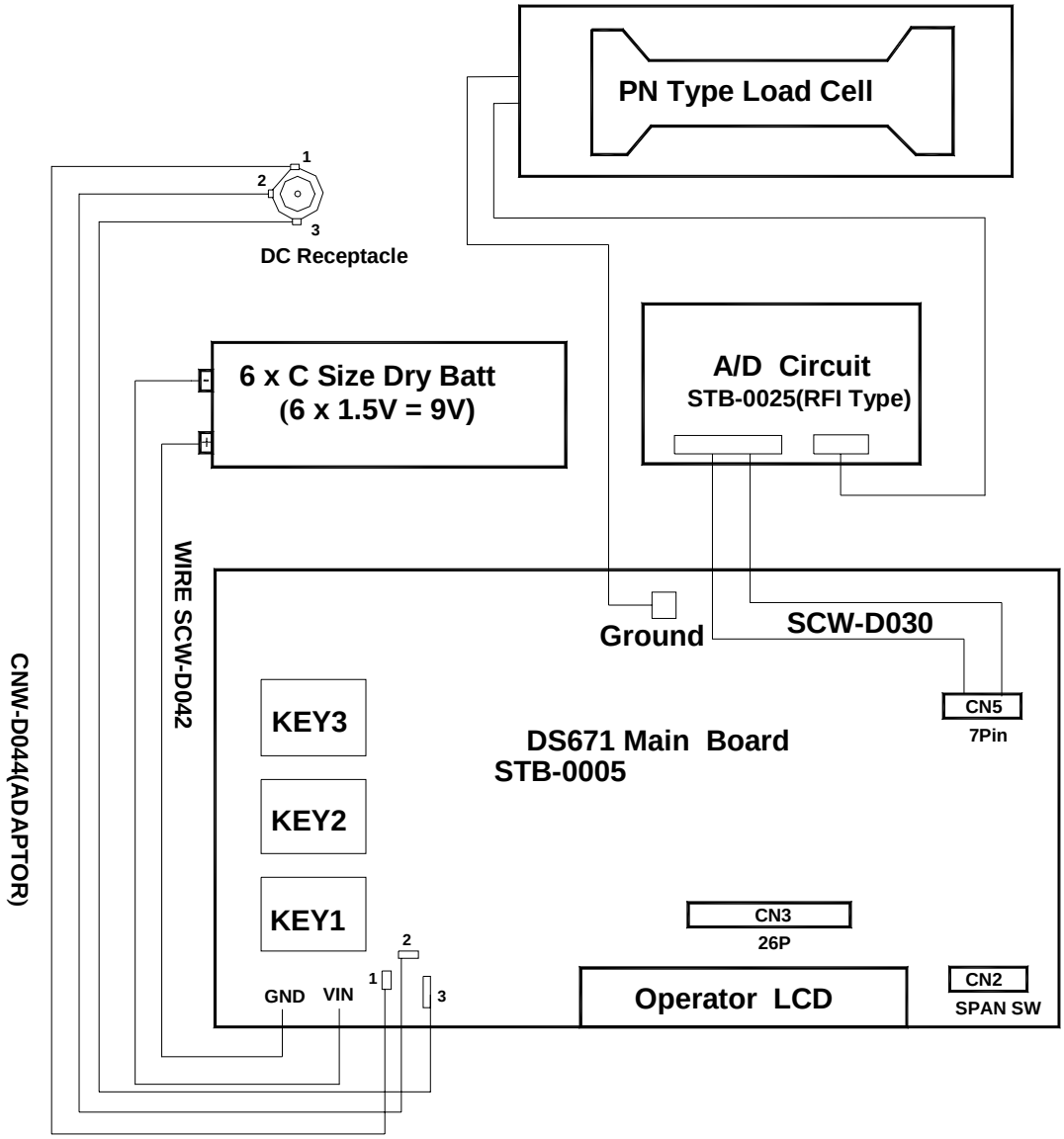
PN Type Load Cell
1
2
3
DC Receptacle
6 x C Size Dry Batt
(6 x 1.5V = 9V)
A/D Circuit
STB-0025(RFI Type)
WIRE SCW-D042
CNW-D044(ADAPTOR)
Ground
SCW-D030
CN5
7Pin
KEY3
KEY2
KEY1
DS671 Main Board
STB-0005
CN3
26P
GND
VIN
Operator LCD
CN2
SPAN SW

6.4. Circuitry Diagram

6.4.1. Power Block